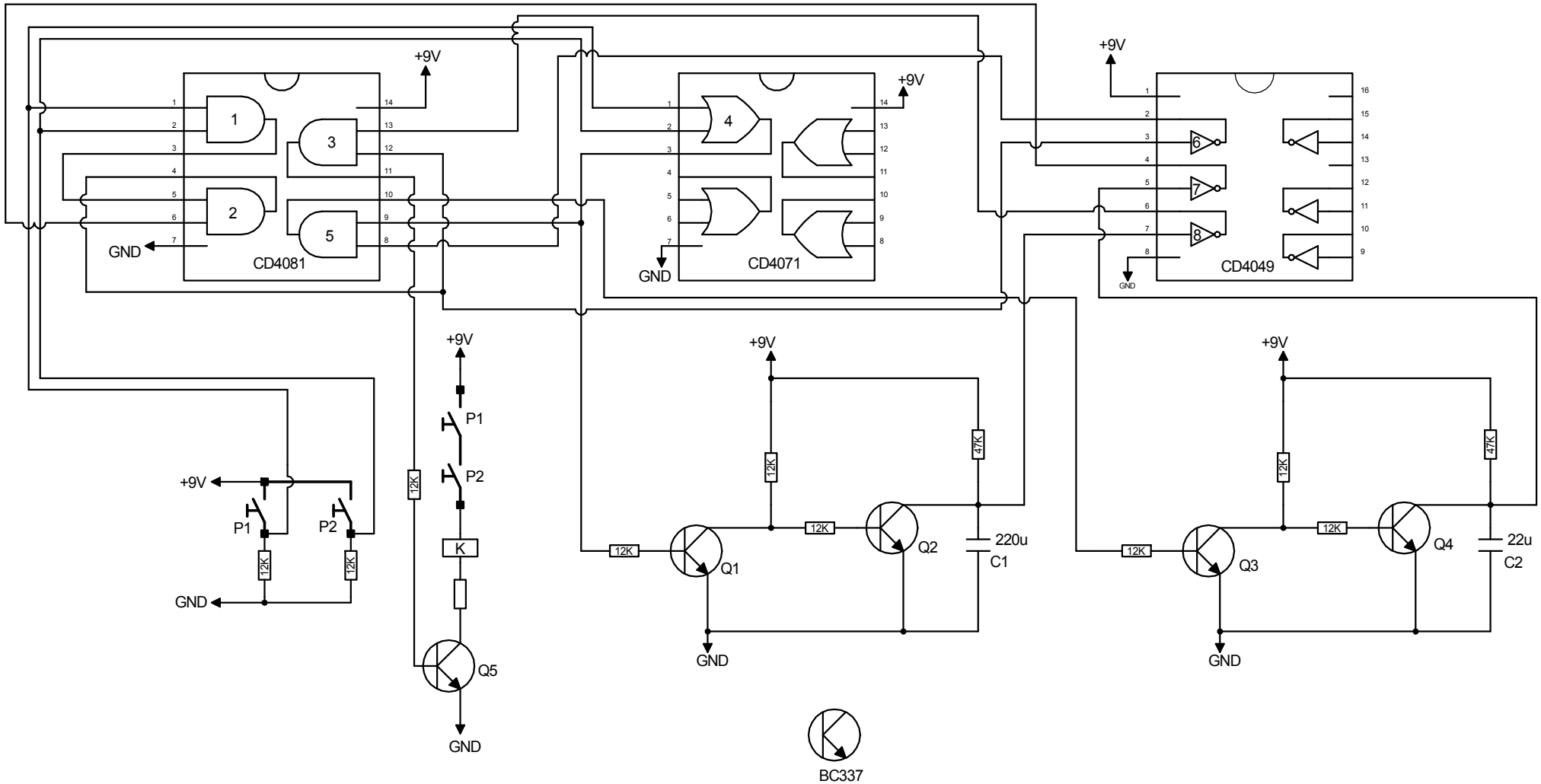
CD4081
CD4071
CD4049
+9V
GND
P1
P2
K
Q5
Q1
Q2
Q3
Q4
12K
47K
220u
C1
22u
C2
BC337

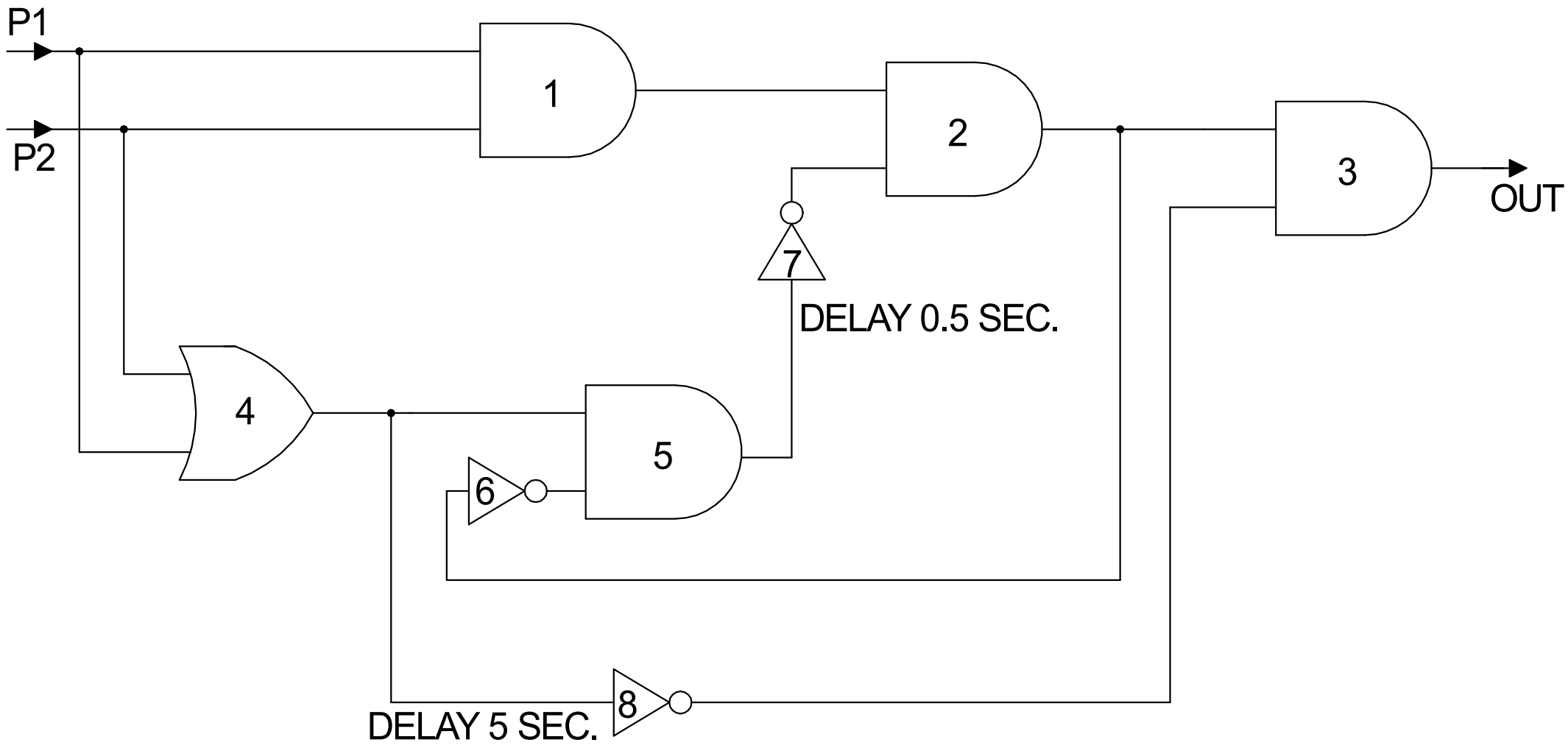
P1
P2
1
2
3
OUT
7
DELAY 0.5 SEC.
4
5
6
8
DELAY 5 SEC.